EUREKA®

1.2-Liter Coffee Maker

INSTRUCTION MANUAL

ECM 1.2L



PLEASE READ THIS MANUAL CAREFULLY BEFORE USING THE APPLIANCE

TABLE OF CONTENTS

IMPORTANT SAFEGUARDS 2

SPECIFICATIONS 3

PART DIAGRAM 4

OPERATION BEFORE FIRST USE 4

CLEANING AND MAINTENANCE 5

CLEAN MINERAL PRECIPITATION 5

COFFEE MAKING TIPS 6

IMPORTANT SAFEGUARDS

1. Ensure that the mains voltage corresponds to the voltage specified on the appliance rating label.
2. Do not leave the appliance unattended while it is in operation. Keep it out of the reach of children and individuals who may be unable to operate it safely.
3. Do not use the appliance near hot surfaces.
4. Disconnect the appliance from the power outlet when not in use and prior to cleaning. Allow the appliance to cool completely before attaching or removing parts, and before cleaning.
5. Do not operate the appliance if the power cord or plug is damaged, or if the appliance malfunctions or has been damaged in any manner. Return the appliance to the nearest authorized service center for inspection, repair, or adjustment.
6. Place the appliance on a stable, flat surface. Ensure that the power cord is positioned safely to prevent accidental pulling or entanglement. Do not wrap the cord around the appliance or bend it excessively.
7. Do not use the appliance outdoors. Always operate and store it in a dry environment.
8. Ensure that the power cord does not come into contact with any heated surfaces of the appliance.
9. Do not touch the heated surfaces of the appliance. Handle only the plastic components and the cup handle.
10. Please note that freshly brewed coffee is extremely hot. Handle the coffee pot carefully to prevent spills or burns.
11. Never operate the coffee machine without water in the reservoir.
12. Do not use the appliance if the cup shows signs of cracks or damage. Use only the cup provided with this appliance. Handle with care, as the ceramic material is fragile.
13. Do not place the coffee pot on a stove or any other heated surface.
14. Do not leave an empty carafe on the warming plate for an extended period, as the glass may crack or break.
15. Always connect the plug to the appliance before plugging the power cord into the wall outlet.
16. To disconnect, switch all controls to the “OFF” position before removing the plug from the outlet.
17. Do not place an empty carafe directly onto the warming plate while dry.
18. Do not immerse the coffee maker in water or any other liquid.
    If the power cord is damaged, it must be replaced by the manufacturer, an authorized service center, or a similarly qualified technician in order to prevent hazards.
19. Retain these instructions for future reference.
20. Children should be supervised to ensure that they do not play with the appliance.

HOUSEHOLD USE ONLY

SPECIFICATIONS

ITEM NAME	EUREKA 1.2-Liter Coffee Maker
ITEM CODE	ECM 1.2L
RATED VOLTAGE	230V a.c.
RATED FREQUENCY	60 Hz
RATED POWER	700 W
UNIT DIMENSION	200 x 235 x 305 mm
BOX DIMENSION	233 x 188 x 308 mm
GROSS / NET WEIGHT	1.60 kg / 1.20 kg
COLOR	Black + Silver

WIRING DIAGRAM

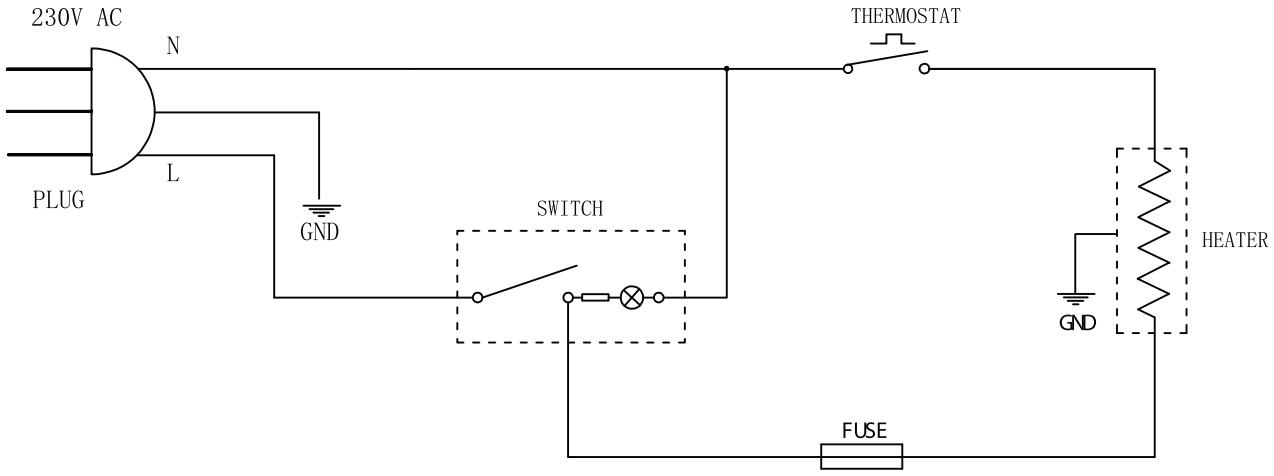

PARTS DIAGRAM

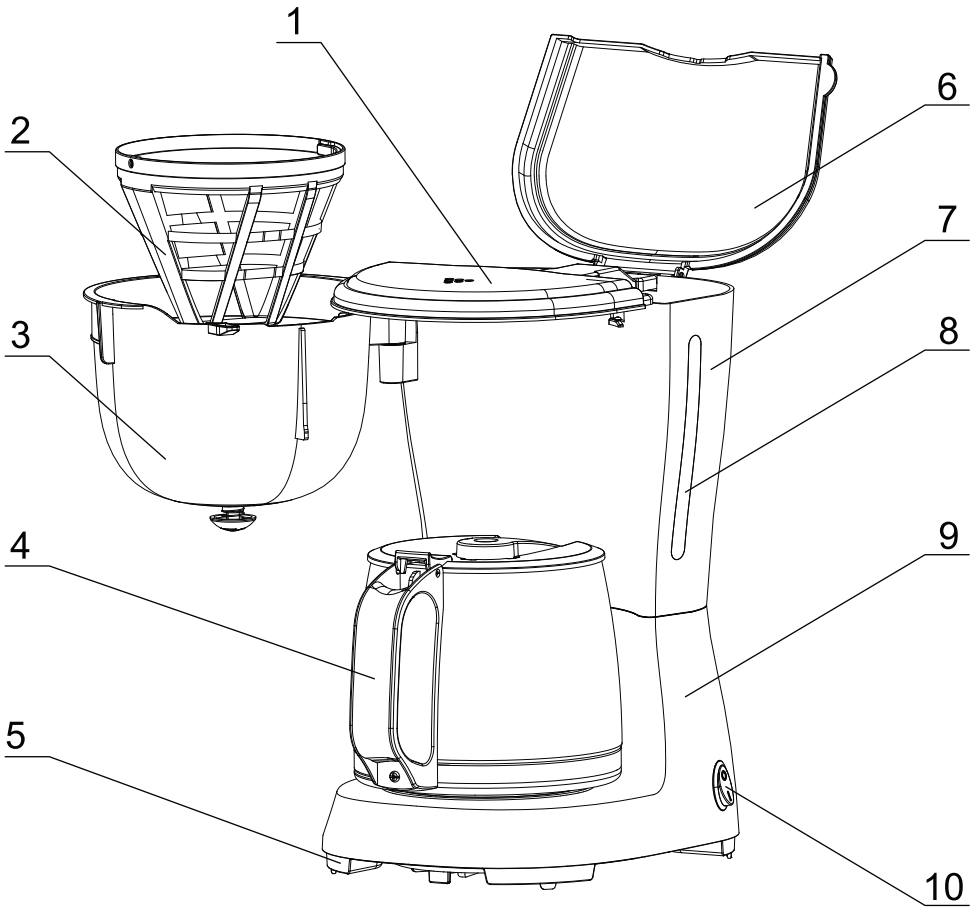

1. Top Cover	2. Filter	3. Funnel ASM	4. Carafe ASM / Coffee Pot
5. Bottom	6. Tank Cover	7. Water Tank	8. Water Gauge
9. Main Housing	10. On/Off Switch		

OPERATION BEFORE FIRST USE

Check whether the accessories are complete and whether the product is damaged. Do not add coffee ground, follow these steps to fill with water to the maximum amount of water, boil the water once or twice, and then dump. Glass cup, cup lids, funnels, filters, etc. should be thoroughly cleaned with warm water.

FAST BREWING

1. Open the cover of the water tank, fill the water tank with a glass, and then cover the water tank.
Note: The water level shall not exceed the maximum scale and shall not be lower than the minimum scale.
2. Unscrew the funnel and place the filter in the funnel, the filter is hold and make sure it's in the right place.
3. Calculated according to one cup of coffee and one tablespoon of coffee ground, add the appropriate amount of coffee powder into the filter. You can also increase or decrease the amount of coffee according to your own taste.

4. Gently shake the filter to evenly distribute the coffee ground, then screw the funnel back and make sure it snaps in place.
5. Insert the glass pot horizontally onto the heat preservation dish, taking care that the protruding part of the bottom of the cup should fall completely into the heat preservation dish.
6. Press the “Power switch” to “I”, the indicator light is on, and the coffee machine starts to work. At any time during the working process, as long as turn on the “power switch” to “0”, the product can stop working.
Note: At any time, you can take out the coffee pot to pour coffee drink, coffee will automatically stop dripping, but take out time should not exceed 30 seconds, so as to avoid coffee overflow from the edge of the funnel.
7. Do not open the tank cover during the coffee brewing process to avoid being burned by steam/hot water.
8. Once wait for the drip has finished (about one minute after the drip has stopped), you can take out the glass, pour out the coffee and enjoy.
Note: Because the coffee powder absorbs a certain amount of water, The coffee that comes out may be less than the water that goes in, and the heat preservation tray will be very hot during operation, please don’t touch it!
9. It is recommended to turn off the power in time after the coffee is cooked and unplug it.
Note: Do not immerse the coffee machine or power cord plug in water or other liquids, and the temperature of freshly brewed coffee is relatively hot, pour coffee to be careful, so as not to be burned by coffee.

CLEANING AND MAINTENANCE

Warning: Please unplug before cleaning and allow the heat preservation tray to cool sufficiently to prevent burns. Do not immerse the coffee maker or power cord plug in water or other liquids to avoid danger.
1. After each use, unscrew the funnel, remove the filter and pour out the coffee grounds, clean the filter and coffee pot components with warm water, and add the cleaning solution if necessary.
2. Scrub the outer surface of the product with a soft damp cloth to remove dirt.
3. When brewing coffee, water droplets may form on the top of the funnel, and then fall onto the heat preservation tray. Therefore, the relevant parts should be wiped clean after each use.

CLEAN MINERAL PRECIPITATION

In order to ensure the effective operation of the coffee machine, you should regularly remove the minerals in it according to the water quality in your area and the frequency of use of electrical appliances.The details are as follows:
Pour the appropriate amount of white vinegar solution (vinegar 1 part, water 3 parts)into the tank, but do not put coffee, according to the “operation instructions” boil the vinegar water, if necessary, can repeat to boil the vinegar water until no yellow liquid flows out. Then pour away the vinegar water and boil it with pure water until it no longer smells of vinegar.

CLEAN MINERAL PRECIPITATION

In order to ensure the effective operation of the coffee machine, you should regularly remove the minerals in it according to the water quality in your area and the frequency of use of electrical appliances.The details are as follows:

Pour the appropriate amount of white vinegar solution (vinegar 1 part, water 3 parts)into the tank, but do not put coffee, according to the “operation instructions” boil the vinegar water, if necessary, can repeat to boil the vinegar water until no yellow liquid flows out. Then pour away the vinegar water and boil it with pure water until it no longer smells of vinegar.

COFFEE MAKING TIPS

1. To make a good coffee, the coffee machine must be clean, so it is necessary to clean the coffee pot regularly according to the “cleaning and maintenance” section, and the coffee pot should use fresh cold water.
2. Store unused ground coffee in a cool, dry place. If a bag of ground coffee is opened and used, it should be tightly sealed and returned to the refrigerator to keep it fresh.
3. For best results, buy your own coffee beans and grind them before brewing.
4. Do not reuse coffee ground, otherwise the coffee flavor will be reduced a lot. We also do not recommend reheating coffee ground, as the aroma of coffee is strongest when it is first brewed.
5. If boining the coffee time is too much, there may be small oil droplets on the coffee surface after the boining too long time the coffee, and the coffee pot should be cleaned in time.
6. If the coffee ground used is very burnt, small oil droplets are more likely to appear.

ENVIRONMENT FRIENDLY DISPOSAL



You can help protect the environment!

Please remember to respect the local regulations :

hand in thenon-working electrical equipments to an appropriate waste disposal center.

EUREKA®

Thank you for patronizing our products!

For more comments and suggestions,
please call our hotline numbers:

0998 584 2057 / 0917 814 5356

EUREKA ELECTRIC APPLIANCES PHILIPPINES CORP.
E. Rodriguez Rd., Oxford Compd., Brgy. Sta. Rosa I, Marilao, Bulacan

eurekahomeappliances.com
EurekaHomeAppliances
eurekahomeappliancesph
eurekahomeappliances